PARA LIGHT ELECTRONICS CO., LTD.
11F., No. 8, Jiankang Rd., Zhonghe Dist., New Taipei City 235, Taiwan,
Tel: 886-2-2225-3733 Fax: 886-2-2225-4800
E-mail: para@para.com.tw http://www.para.com.tw）

DATA SHEET

PART NO. : LC393LGCTS60-U1

REV: A / 0

CUSTOMER'S APPROVAL : _____ DCC : _____

PACKAGE OUTLINE DIMENSIONS

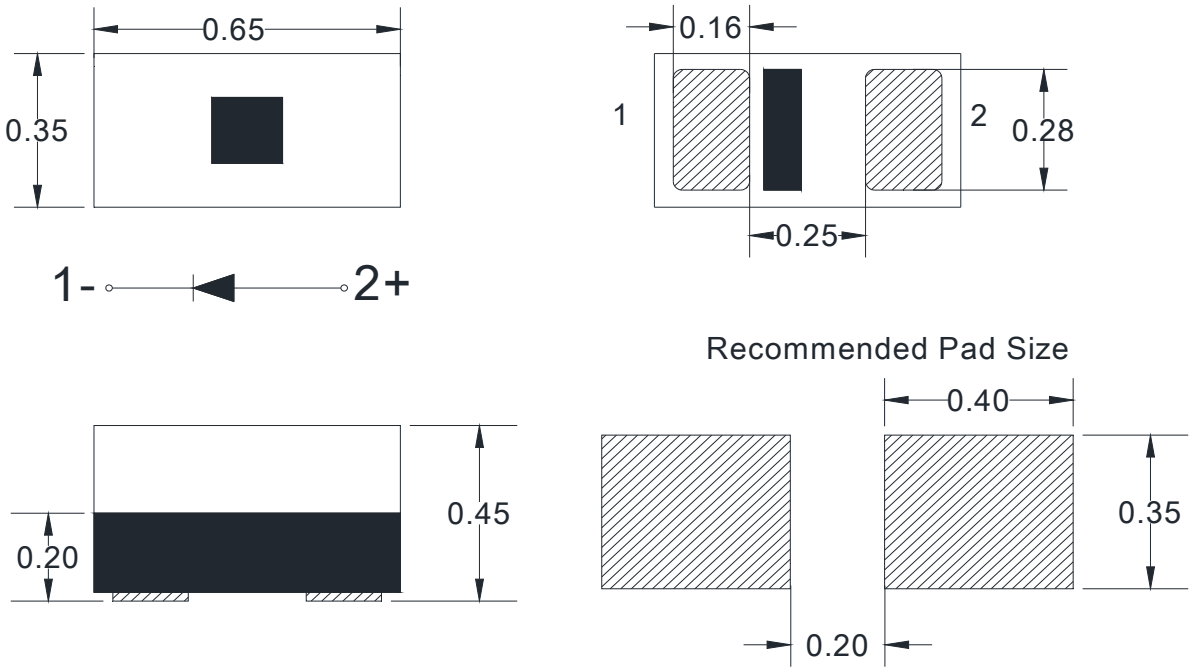

Notes:

1. All dimensions are in millimeters.
2. Tolerance is ± 0.1mm (.004") unless otherwise noted.

Features

- ✳ Top view, wide view angle, single color Chip LED.
- ✳ Package in 8mm tape on 7" diameter reels.
- ✳ Compatible with automatic Pick & Place equipment.
- ✳ Compatible with Infrared and Wave soldering reflow solder processes.
- ✳ EIA STD package.
- ✳ I.C. compatible.
- ✳ Pb free product.
- ✳ Meet RoHS Green Product.
- ✳ Moisture sensitivity level: 3

Chip Materials

- ∗ Dice Material : InGaN
- ∗ Light Color : Green light
- ∗ Lens Color : Water Clear

Absolute Maximum Ratings(Ta=25°C)

Symbol	Parameter	Rating	Unit
P_D	Power Dissipation	90	mW
IFP	Peak Forward Current (1/10 Duty Cycle, 0.1ms Pulse Width)	100	mA
I_F	Continuous Forward Current	30	mA
V_R	Reverse Voltage	5	V
ESD	Electrostatic Discharge Threshold(HBM)NoteA	2000	V
Topr	Operating Temperature Range	-40 ~ +85	°C
Tstg	Storage Temperature Range	-40 ~ +85	°C

HBM : Human Body Model. Seller gives no other assurances regarding the ability of to withstand ESD.

Electro-Optical Characteristics(Ta=25°C)

Parameter	Symbol	Min	Typ	Max	Unit	Test Condition
Luminous Intensity	IV	220	-	440	mcd	IF=10mA
Viewing Angle	2θ1/2	-	120	-	deg	IF=10mA
Dominant Wavelength	λd	513	-	522	nm	IF=10mA
Forward Voltage	VF	2.4	-	3.0	V	IF=10mA
Reverse Current	IR	-	-	5	μA	VR = 5V

Bin Code List

Luminous Intensity(IV), Unit:mcd@10mA		
Bin Code	Min	Max
L	220	280
M	280	350
N	350	440

Tolerance of each bin are±15%

Forward Voltage(VF), Unit:V @10mA		
Bin Code	Min	Max
2C	2.4	2.6
2D	2.6	2.8
2E	2.8	3.0

Tolerance of each bin are±0.1V

Dominant Wavelength (WD),Unit:nm @10mA		
Bin Code	Min	Max
G2	513	516
G3	516	519
G4	519	522

Tolerance of each bin are±1nm

Notes:

1. Luminous intensity is measured with a light sensor and filter combination that proximities the CIE eye-response curve.
2. 2θ1/2 is the off-axis angle at which the luminous intensity is half the axial luminous intensity.
3. The dominant wavelength λd is derived from the CIE chromaticity diagram and represents the single wavelength which defines the color of the device.
4. Caution in ESD:
   Static Electricity and surge damages the LED. It is recommended use a wrist band or anti-electrostatic glove when handling the LED. All devices, equipment and machinery must be properly grounded.
5. Major standard testing equipment by “Instrument System” Model: CAS140B Compact Array Spectrometer and “KEITHLEY” Source Meter Model: 2400.

Typical Electro-Optical Characteristics Curves

Voltage current relationship

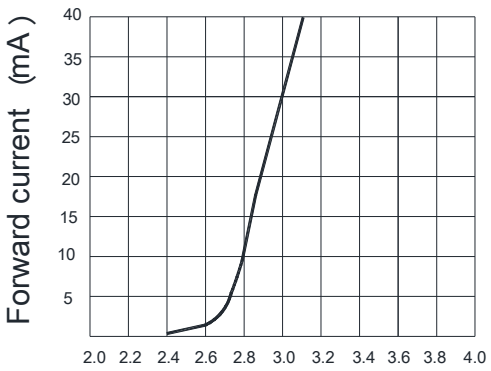

Relative intensity VS wavelength

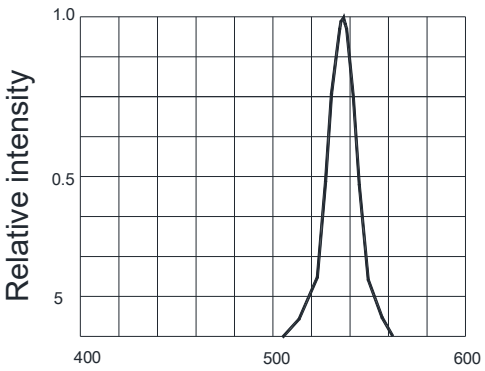

Relative light intensity vs current

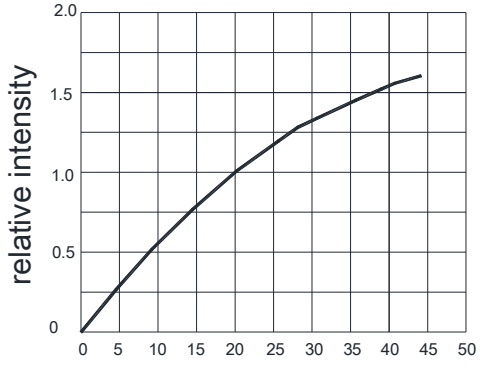

Relative light intensity vs ambient temperature

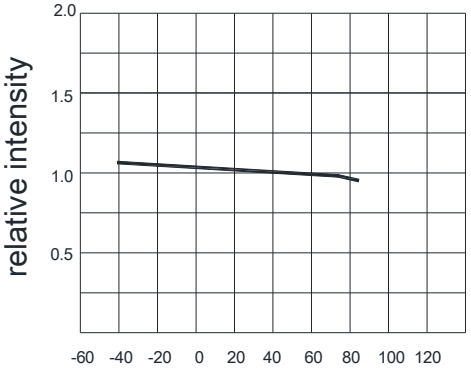

Current and ambient temperature

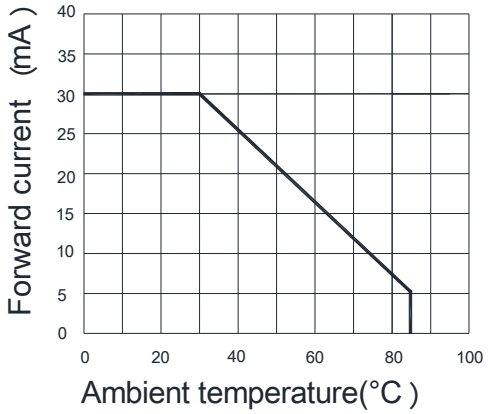

Radiation angle

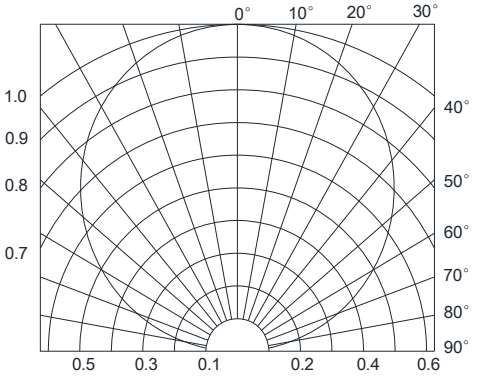

● Label Explanation



ITEM CODE:PARRA LIGHT

PART NO: LC393LGCT-10A-S60

IV --- Luminous Intensity Code

LOT NO: EN S L 12 09 0110

A B C D E

A---EN: Emos Code

B---S:SMD

L---Local

D---Year

E---Month

F---SPEC.

PACKING QUANTITY OF BAG :

3000pcs for 150、170、110、155、115 series

4000pcs for 191 series

5000pcs for 192 series

DATE CODE：2012 09 10

G H I

G--- Year

H--- Month

I --- Day

Reel Dimensions

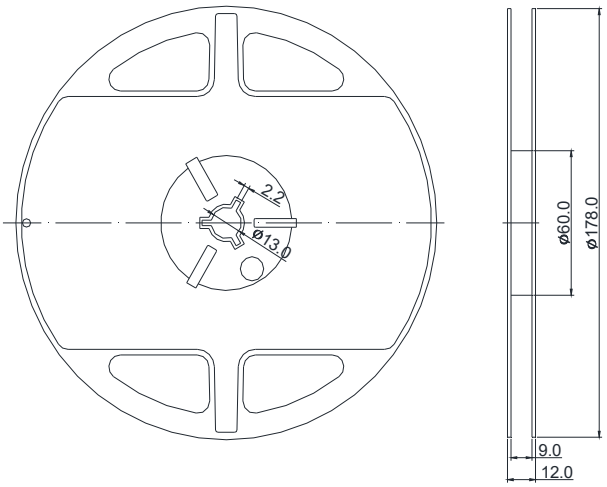

Notes:

1. Taping Quantity : 2000pcs
2. The tolerances unless mentioned is±0.1mm, Angle±0.5°, Unit : mm.

Package Dimensions Of Tape And Reel

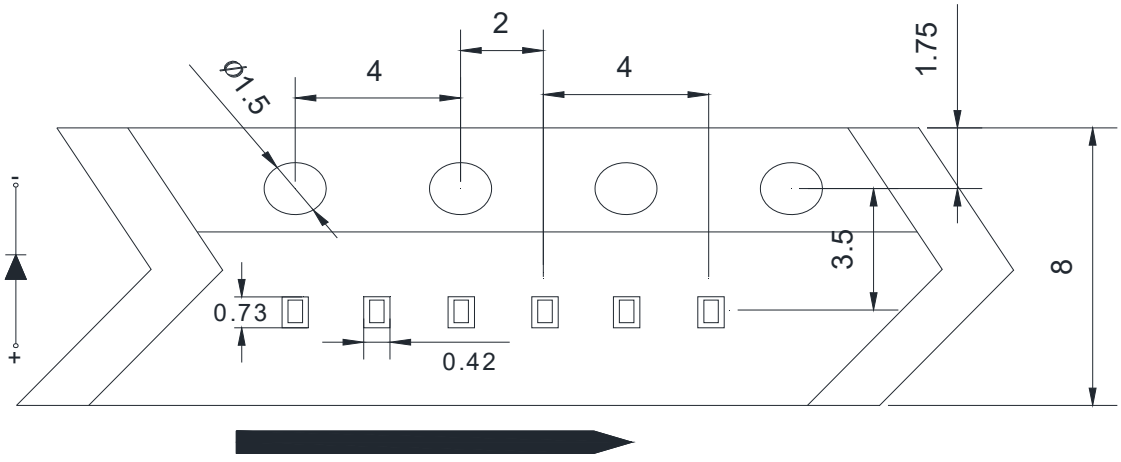

Notes:All dimensions are in millimeters.

Cleaning

- If cleaning is required , use the following solutions for less than 1 minute and less than 40℃.
- Appropriate chemicals: Ethyl alcohol and isopropyl alcohol.
- Effect of ultrasonic cleaning on the LED resin body differs depending on such factors as the oscillator output, size of PCB and LED mounting method. The use of ultrasonic cleaning should be enforced at proper output after confirming there is no problem.

Suggest Soldering Pad Dimensions

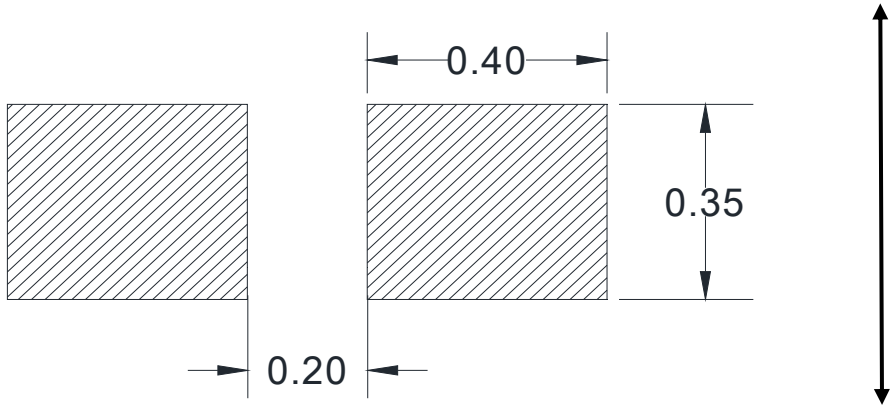

● Suggest Sn/Pb IR Reflow Soldering Profile Condition:

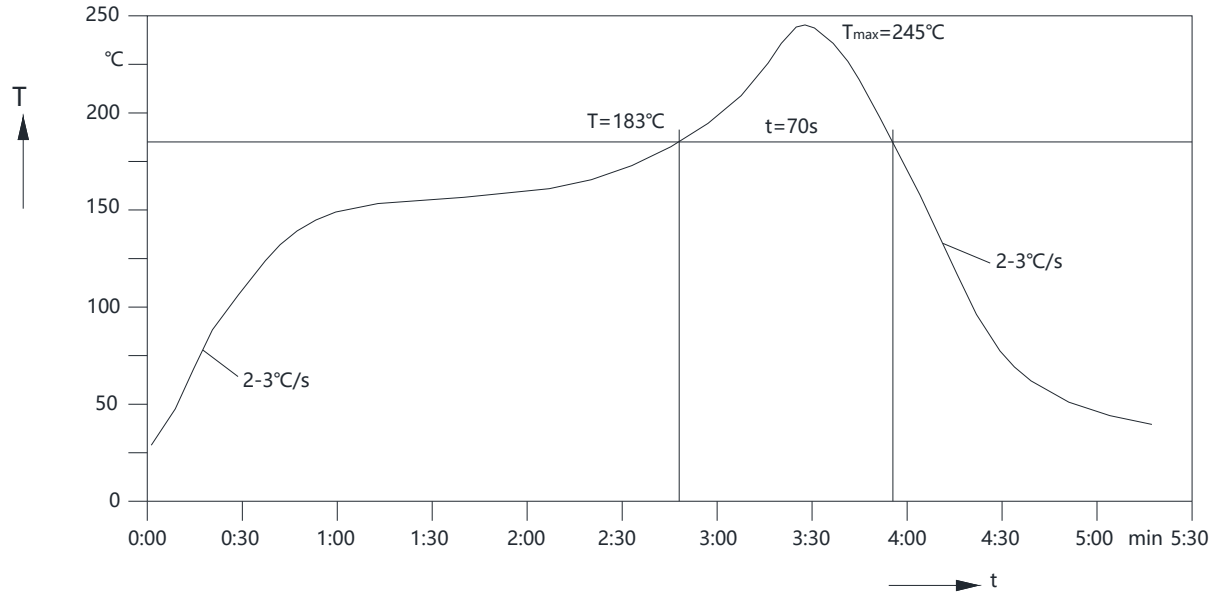

● Suggest Pb-Free IR Reflow Soldering Profile Condition:

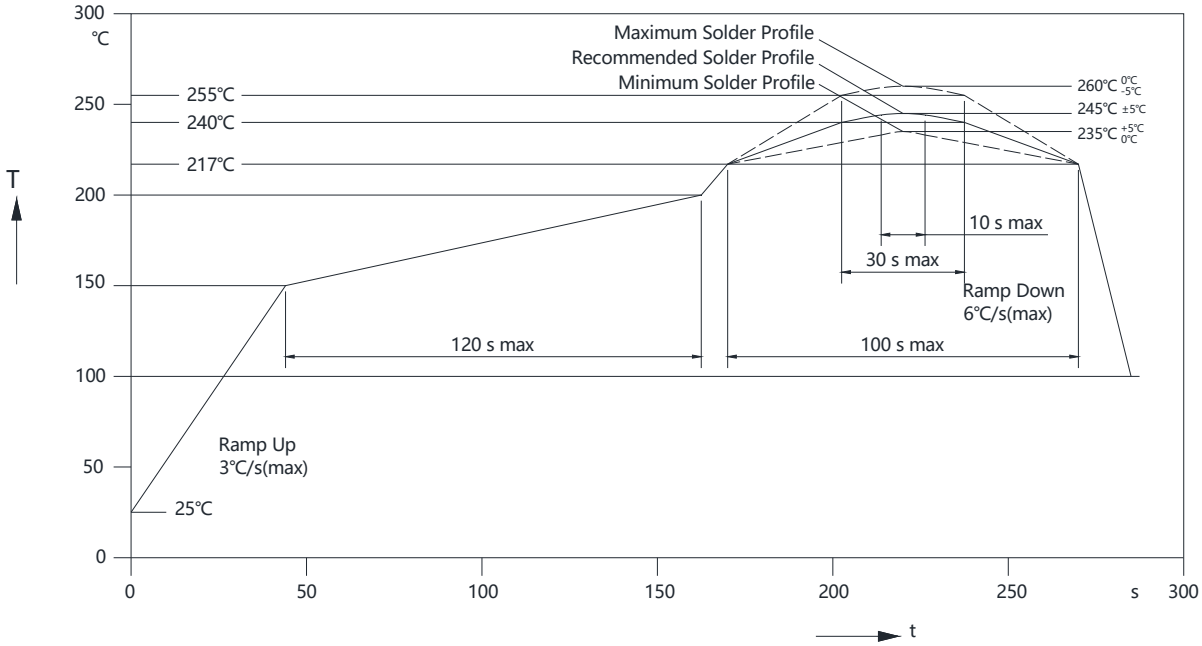

● CAUTIONS

1.Application Limitation :

The LED's described here are intended to be used for ordinary electronic equipment (such as office equipment, communication equipment and household application).Consult PARA's sales in advance for information on application in which exceptional quality and reliability are required, particularly when the failure or malfunction of the LED's may directly jeopardize life or health (such as airplanes, automobiles, traffic control equipment, life support system and safety devices).

2.Storage

Do not open moisture proof bag before the products are ready to use.

Before opening the package: The LEDs should be kept at 30℃ or less and 90%RH or less.

If the moisture absorbent material (silica gel) has faded away or the LEDs have exceeded the storage time, baking treatment should be performed using the following conditions.

Baking treatment: 60±5℃ for 24 hours.

3.Soldering

Do not apply any stress to the lead frame during soldering while the LED is at high temperature.

Recommended soldering condition.

Reflow Soldering :

Pre-heat 120~150°C, 120sec. MAX., Peak temperature : 240°C Max. Soldering time : 10 sec Max.

Soldering Iron : (Not recommended)

Temperature 300°C Max., Soldering time : 3 sec. Max.(one time only), power dissipation of iron : 20W Max. use SN60 solder of solder with silver content and don't to touch LED lens when soldering.

Wave soldering :

Pre-heat 100°C Max, Pre-heat time 60 sec. Max, Solder wave 260°C Max, Soldering time 5 sec. Max. preformed consecutively cooling process is required between 1st and 2nd soldering processes.

4. Lead-Free Soldering

For Reflow Soldering :

1、Pre-Heat Temp:150-180℃,120sec.Max.

2、Soldering Temp:Temperature Of Soldering Pot Over 230℃,40sec.Max.

3、Peak Temperature:260℃，5sec.

4、Reflow Repetition:2 Times Max.

5、Suggest Solder Paste Formula 93.3 Sn/3.1 Ag/3.1 Bi /0.5 Cu

For Soldering Iron (Not Recommended) :

1、Iron Tip Temp:350℃ Max.

2、Soldering Iron:30w Max.

3、Soldering Time:3 Sec. Max. One Time.

For Dip Soldering :

1、Pre-Heat Temp:150℃ Max. 120 Sec. Max.

2、Bath Temp:265℃ Max.

3、Dip Time:5 Sec. Max.

5. Drive Method

Circuit model A

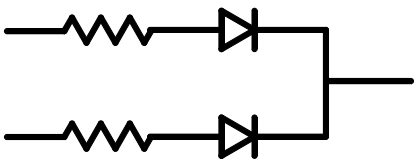

Circuit model B

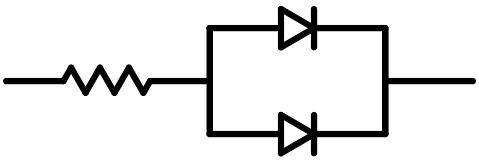

(A)Recommended circuit.

(B)The difference of brightness between LED`s could be found due to the Vf-If characteristics of LED.