**PARA LIGHT ELECTRONICS CO., LTD.**
11F., No. 8, Jiankang Rd., Zhonghe Dist., New Taipei City 235, Taiwan,
Tel: 886-2-2225-3733 Fax: 886-2-2225-4800
E-mail: para@para.com.tw http://www.para.com.tw）

# DATA SHEET

# PART NO. : LC393KBCTS60-U1

# REV: A / 0

CUSTOMER'S APPROVAL : _____ DCC : _____

## PACKAGE OUTLINE DIMENSIONS

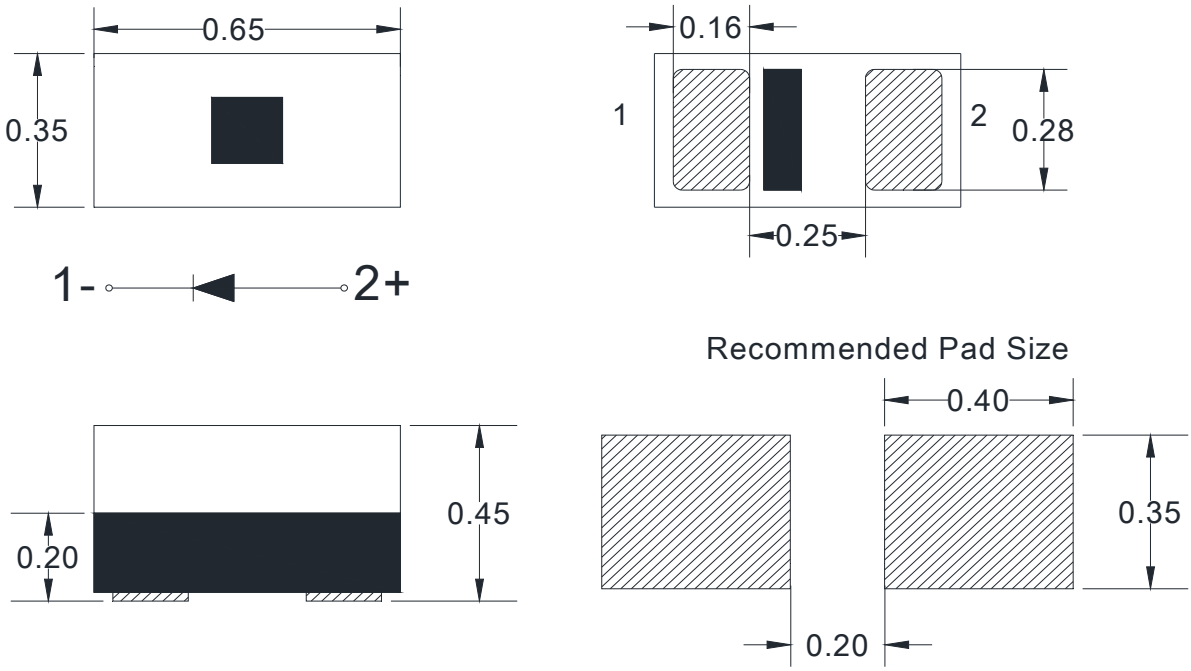


Notes:

1. All dimensions are in millimeters.
2. Tolerance is ± 0.1mm (.004") unless otherwise noted.

## Features

- ✳ Top view, wide view angle, single color Chip LED.
- ✳ Package in 8mm tape on 7" diameter reels.
- ✳ Compatible with automatic Pick & Place equipment.
- ✳ Compatible with Infrared and Wave soldering reflow solder processes.
- ✳ EIA STD package.
- ✳ I.C. compatible.
- ✳ Pb free product.
- ✳ Meet RoHS Green Product.
- ✳ Moisture sensitivity level: 3

## Chip Materials

- ∗ Dice Material : InGaN
- ∗ Light Color : Blue light
- ∗ Lens Color : Water Clear

## Absolute Maximum Ratings(Ta=25°C)

| Symbol | Parameter | Rating | Unit |
|---|---|---|---|
| $P_D$ | Power Dissipation | 90 | mW |
| IFP | Peak Forward Current (1/10 Duty Cycle, 0.1ms Pulse Width) | 100 | mA |
| $I_F$ | Continuous Forward Current | 30 | mA |
| $V_R$ | Reverse Voltage | 5 | V |
| ESD | Electrostatic Discharge Threshold(HBM)NoteA | 2000 | V |
| Topr | Operating Temperature Range | -40 ~ +85 | °C |
| Tstg | Storage Temperature Range | -40 ~ +85 | °C |

HBM : Human Body Model. Seller gives no other assurances regarding the ability of to withstand ESD.

## Electro-Optical Characteristics(Ta=25°C)

| Parameter | Symbol | Min | Typ | Max | Unit | Test Condition |
|---|---|---|---|---|---|---|
| Luminous Intensity | IV | 55 | - | 130 | mcd | IF=10mA |
| Viewing Angle | 2θ1/2 | - | 120 | - | deg | IF=10mA |
| Dominant Wavelength | λd | 459 | - | 468 | nm | IF=10mA |
| Forward Voltage | VF | 2.4 | - | 3.0 | V | IF=10mA |
| Reverse Current | IR | - | - | 5 | μA | VR = 5V |

## Bin Code List

| Luminous Intensity(IV), Unit:mcd@10mA | | |
|---|---|---|
| Bin Code | Min | Max |
| G | 55 | 75 |
| H | 75 | 100 |
| I | 100 | 130 |

Tolerance of each bin are±15%

| Forward Voltage(VF), Unit:V @10mA | | |
|---|---|---|
| Bin Code | Min | Max |
| 2C | 2.4 | 2.6 |
| 2D | 2.6 | 2.8 |
| 2E | 2.8 | 3.0 |

Tolerance of each bin are±0.1V

| Dominant Wavelength (WD),Unit:nm @10mA | | |
|---|---|---|
| Bin Code | Min | Max |
| B4 | 459 | 462 |
| B5 | 462 | 465 |
| B6 | 465 | 468 |

Tolerance of each bin are±1nm

Notes:

1. Luminous intensity is measured with a light sensor and filter combination that proximities the CIE eye-response curve.
2. 2θ1/2 is the off-axis angle at which the luminous intensity is half the axial luminous intensity.
3. The dominant wavelength λd is derived from the CIE chromaticity diagram and represents the single wavelength which defines the color of the device.
4. Caution in ESD:
   Static Electricity and surge damages the LED. It is recommended use a wrist band or anti-electrostatic glove when handling the LED. All devices, equipment and machinery must be properly grounded.
5. Major standard testing equipment by “Instrument System” Model: CAS140B Compact Array Spectrometer and “KEITHLEY” Source Meter Model: 2400.

## Typical Electro-Optical Characteristics Curves

Voltage current relationship

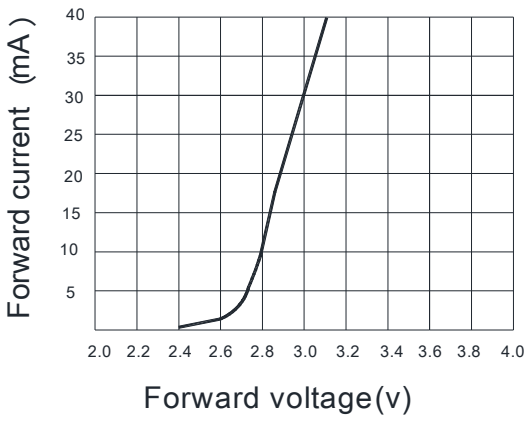


Relative intensity VS wavelength

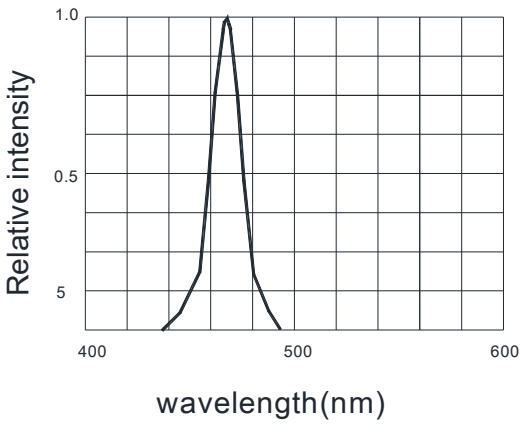


Relative light intensity vs current

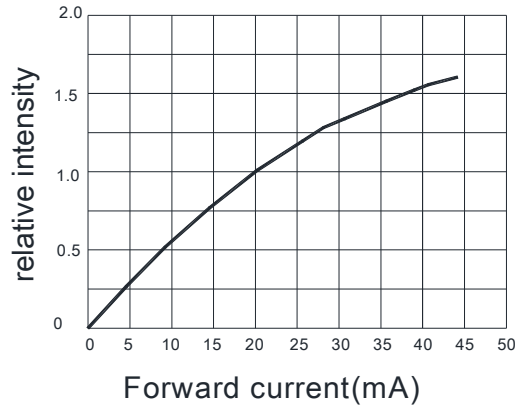


Relative light intensity vs ambient temperature

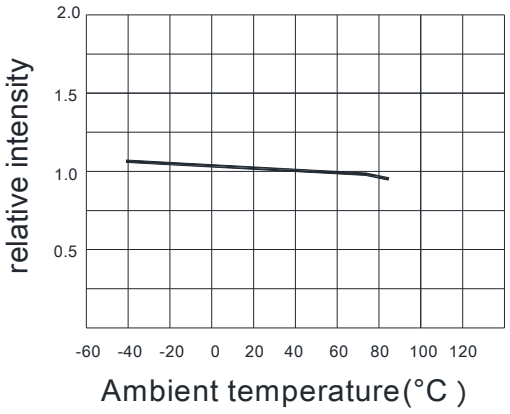


Current and ambient temperature

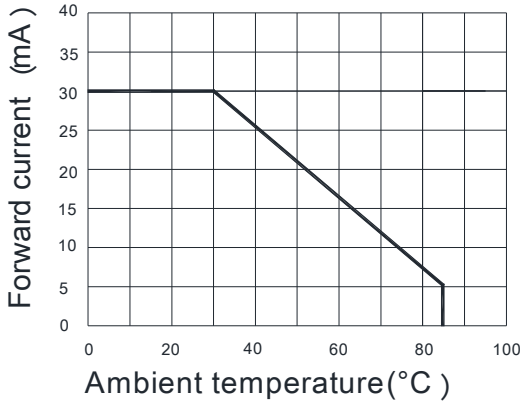


Radiation angle

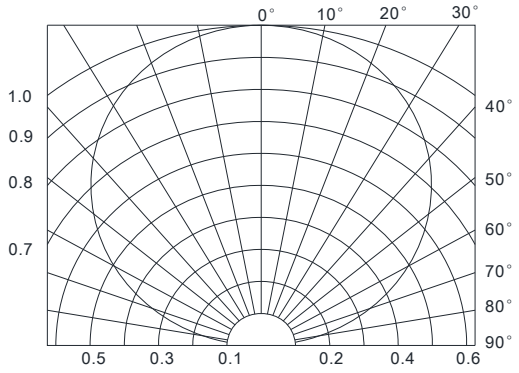

## ● Label Explanation




ITEM CODE:PARRA LIGHT

PART NO: LC393KBCT-10A-S60

IV --- Luminous Intensity Code

LOT NO: EN S L 12 09 0110

A B C D E

A---EN: Emos Code

B---S:SMD

L---Local

D---Year

E---Month

F---SPEC.

PACKING QUANTITY OF BAG :

3000pcs for 150、170、110、155、115 series

4000pcs for 191 series

5000pcs for 192 series

DATE CODE：2012 09 10

G H I

G--- Year

H--- Month

I --- Day

## Reel Dimensions

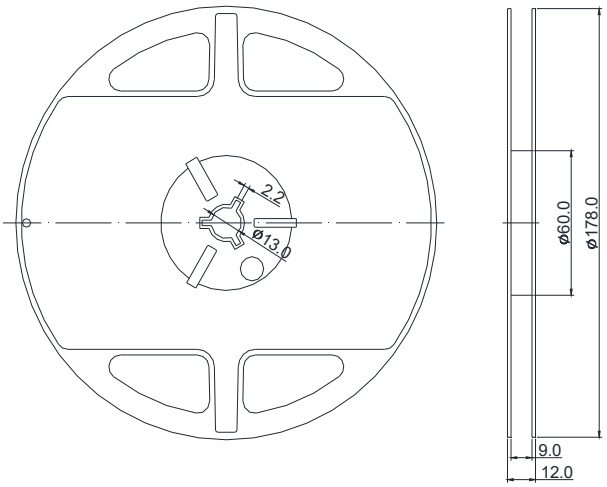


Notes:

1. Taping Quantity : 2000pcs
2. The tolerances unless mentioned is±0.1mm, Angle±0.5°, Unit : mm.

## Package Dimensions Of Tape And Reel

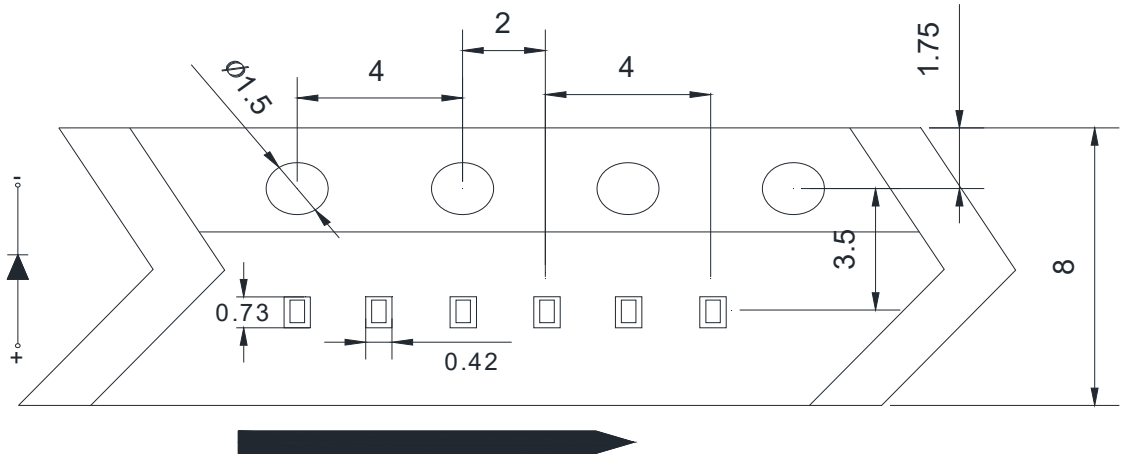


Notes:All dimensions are in millimeters.

## Cleaning

- If cleaning is required , use the following solutions for less than 1 minute and less than 40℃.
- Appropriate chemicals: Ethyl alcohol and isopropyl alcohol.
- Effect of ultrasonic cleaning on the LED resin body differs depending on such factors as the oscillator output, size of PCB and LED mounting method. The use of ultrasonic cleaning should be enforced at proper output after confirming there is no problem.

## Suggest Soldering Pad Dimensions

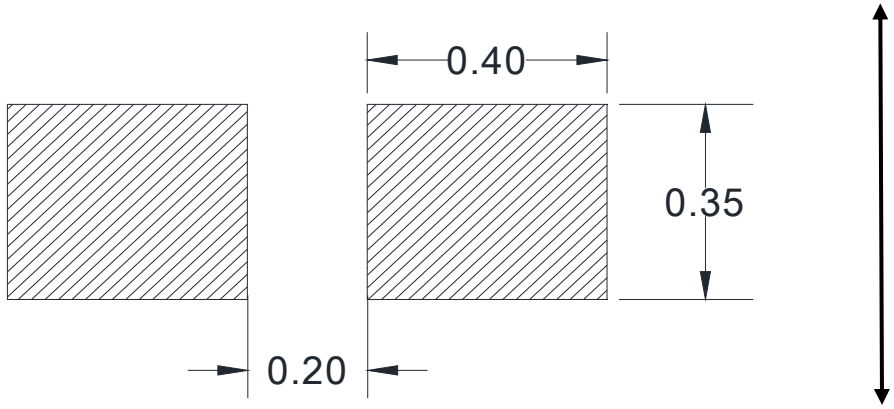

● Suggest Sn/Pb IR Reflow Soldering Profile Condition:

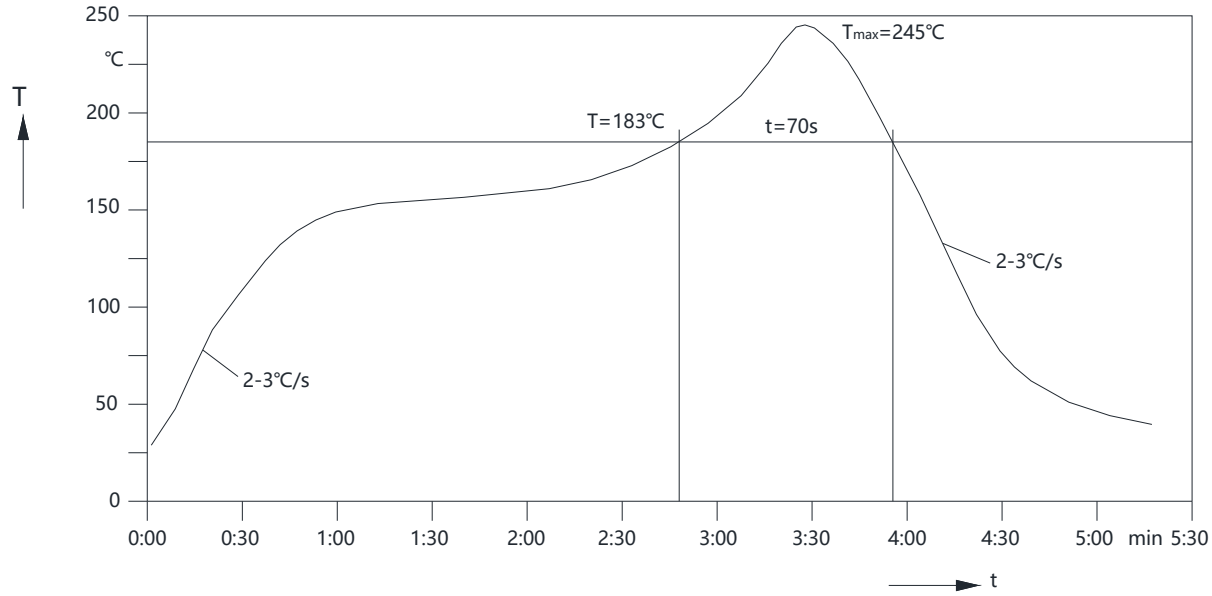


● Suggest Pb-Free IR Reflow Soldering Profile Condition:

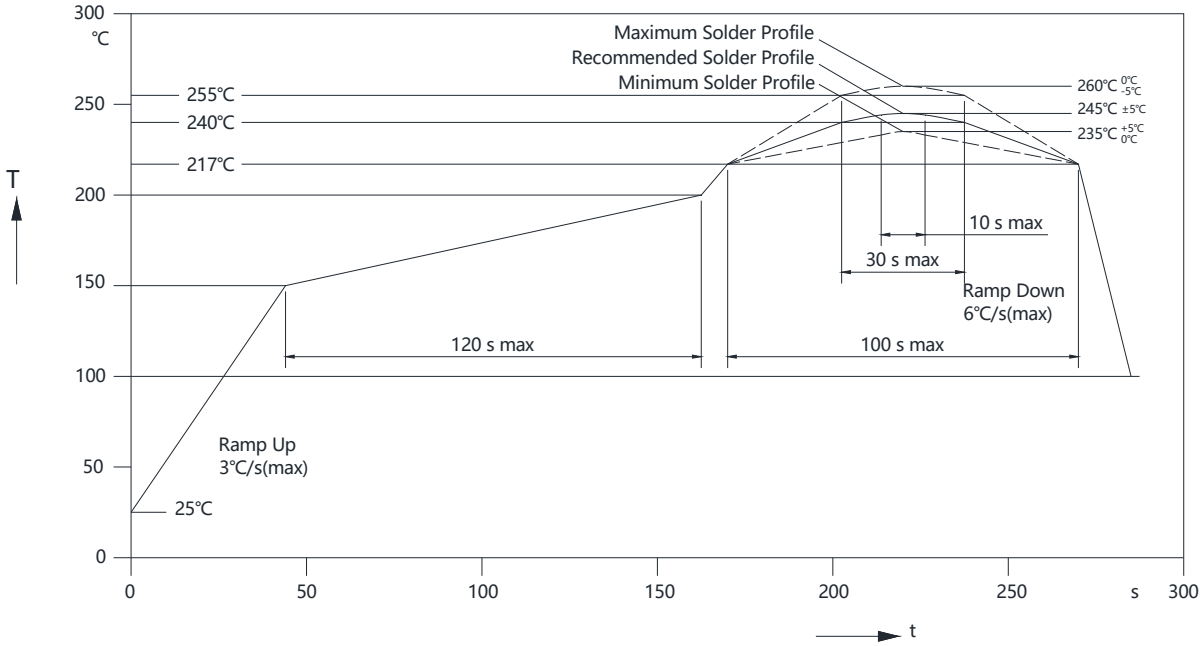

## ● CAUTIONS

1.Application Limitation :

The LED's described here are intended to be used for ordinary electronic equipment (such as office equipment, communication equipment and household application).Consult PARA's sales in advance for information on application in which exceptional quality and reliability are required, particularly when the failure or malfunction of the LED's may directly jeopardize life or health (such as airplanes, automobiles, traffic control equipment, life support system and safety devices).

2.Storage

Do not open moisture proof bag before the products are ready to use.

Before opening the package: The LEDs should be kept at 30℃ or less and 90%RH or less.

If the moisture absorbent material (silica gel) has faded away or the LEDs have exceeded the storage time, baking treatment should be performed using the following conditions.

Baking treatment: 60±5℃ for 24 hours.

3.Soldering

Do not apply any stress to the lead frame during soldering while the LED is at high temperature.

Recommended soldering condition.

Reflow Soldering :

Pre-heat 120~150°C, 120sec. MAX., Peak temperature : 240°C Max. Soldering time : 10 sec Max.

Soldering Iron : (Not recommended)

Temperature 300°C Max., Soldering time : 3 sec. Max.(one time only), power dissipation of iron : 20W Max. use SN60 solder of solder with silver content and don't to touch LED lens when soldering.

Wave soldering :

Pre-heat 100°C Max, Pre-heat time 60 sec. Max, Solder wave 260°C Max, Soldering time 5 sec. Max. preformed consecutively cooling process is required between 1st and 2nd soldering processes.

4. Lead-Free Soldering

For Reflow Soldering :

1、Pre-Heat Temp:150-180℃,120sec.Max.

2、Soldering Temp:Temperature Of Soldering Pot Over 230℃,40sec.Max.

3、Peak Temperature:260℃，5sec.

4、Reflow Repetition:2 Times Max.

5、Suggest Solder Paste Formula 93.3 Sn/3.1 Ag/3.1 Bi /0.5 Cu

For Soldering Iron (Not Recommended) :

1、Iron Tip Temp:350℃ Max.

2、Soldering Iron:30w Max.

3、Soldering Time:3 Sec. Max. One Time.

For Dip Soldering :

1、Pre-Heat Temp:150℃ Max. 120 Sec. Max.

2、Bath Temp:265℃ Max.

3、Dip Time:5 Sec. Max.

5. Drive Method

Circuit model A

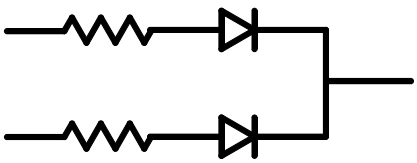

Circuit model B

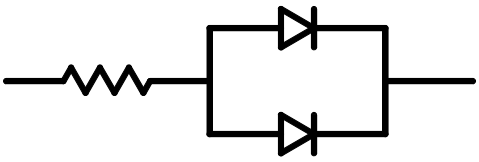

(A)Recommended circuit.

(B)The difference of brightness between LED`s could be found due to the Vf-If characteristics of LED.