PARA LIGHT ELECTRONICS CO., LTD.
11F, No.8, Jiankang Rd,Zhonghe Dist,New Taipei City 235, Taiwan
Tel: 886-2-2225-3733 Fax: 886-2-2225-4800
E-mail: para@para.com.tw http:// www.paralighttaiwan.com

DATA SHEET

PART NO. : LC3224DKG-XG-U1

REV : A / 0

PARA LIGHT

CUSTOMER'S APPROVAL : _____ DCC : _____

PACKAGE DIMENSIONS

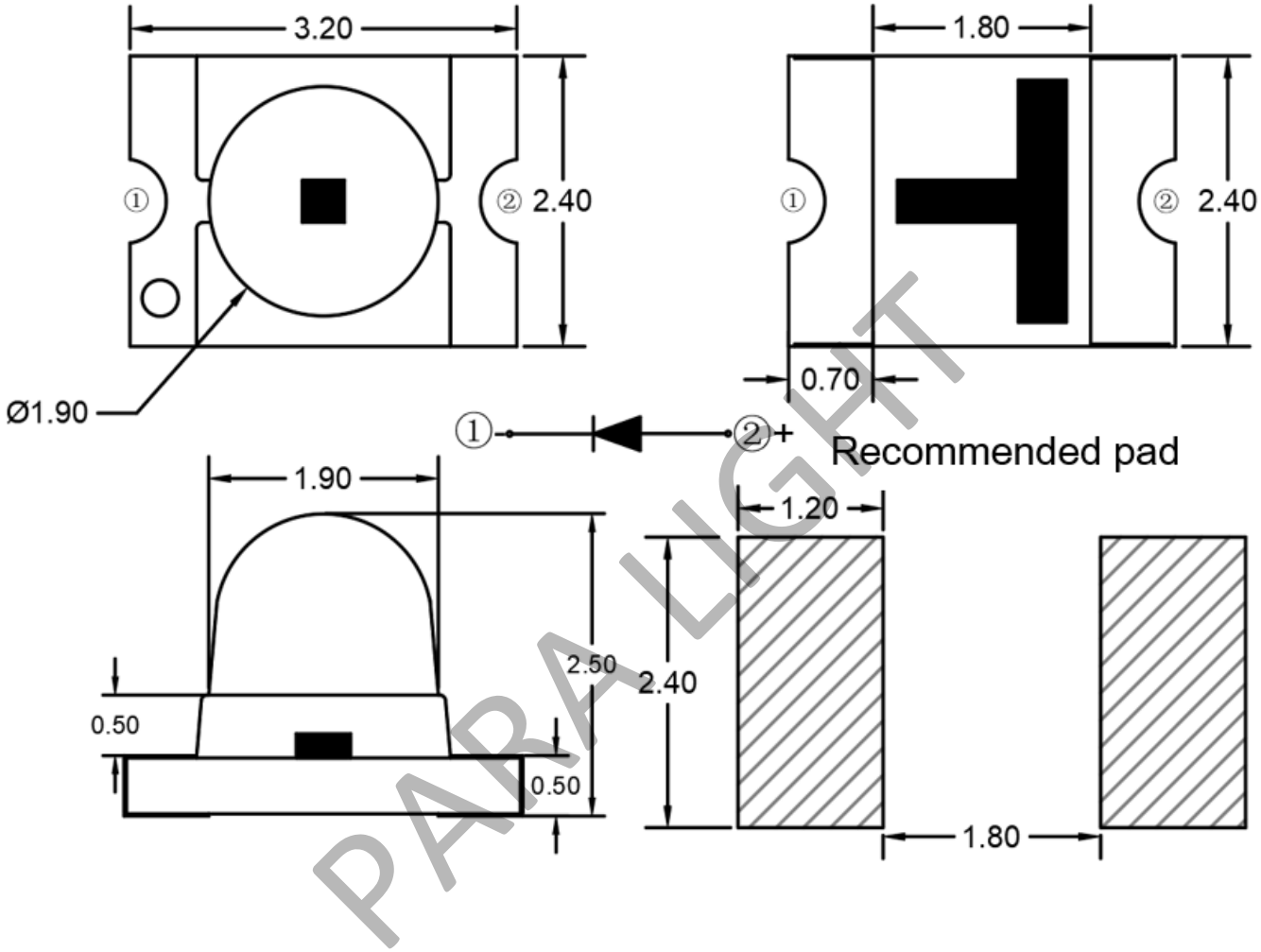

PARA LIGHT

NOTES :

1.All dimensions are in millimeters
2.Tolerances are±0.15mm unless otherwise noted
3.The Specifications in the datasheet are subject to change without notice.

FEATURES

Dimension (L / w / h): 3.2 x 2.4 x 2.5mm
Color: Yellow-green light
Colloid: Transparent colloid
EIA standard packaging
Environmental protection products meet ROHS requirements
Suitable for automatic placement machine
Suitable for infrared reflow soldering process

ABSOLUTE MAXIMUM RATING : (Ta = 25℃)

Symbol	Parameter	Rating	Unit
PD	Power consumption	65	mW
If	Forward Current	25	mA
Ifp	Maximum pulse current (1/10 duty cycle 0.1ms)	80	mA
VR	Reverse Voltage	5	V
ESD	Electrostatic discharge	2000	V
Topr	Operating Temperature Range	-40℃ ~ + 85℃	℃
Tstg	Storage Temperature Range	-40℃ ~ + 85℃	℃
Tsol	Reflow soldering : 255°C ,10s, Hand soldering : 300°C ,3s		

Note: Pulse width ≤0.1ms,Duty≤1/10

ELECTRO-OPTICAL CHARACTERISTICS : (Ta = 25℃)

Parameter	Symbol	Min.	Typ.	Max.	Unit	Test Condition
Luminous Intensity	Iv	280	-	550	mcd	IF=20mA
Viewing Angle	2θ1/2	-	20	-	deg	IF=20mA
Dominant Wavelength	WD	568	-	574	nm	IF=20mA
Forward Voltage	VF	1.8	-	2.4	V	IF=20mA
Reverse Current	IR	-	-	10	μA	VR=5V

PARA LIGHT

- Bin Code List

Parameter	Symbol	Code	Min.	Max.	Unit	Test Condition
Luminous Intensity	IV	IV1	280	350	mcd	IF =20mA
		IV2	350	440		
		IV3	440	550		
Forward Voltage	VF	VF1	1.8	2.0	V	IF =20mA
		VF2	2.0	2.2		
		VF3	2.2	2.4		
Dominant Wavelength	WD	λd1	568	570	nm	IF =20mA
		λd2	570	572		
		λd3	572	574		

PARA LIGHT

Label marking error:

1. Tolerance of measurement of luminous intensity is ±20%.
2. Tolerance of measurement of dominant wavelength is ±2nm.
3. Tolerance of measurement of Vf is ±0.1 V.

Typical Electro-Optical Characteristic s Curves

Relative intensity vs wavelength

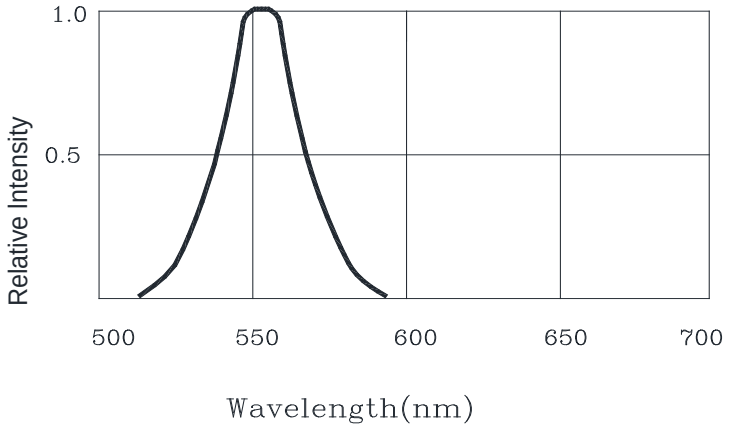

Voltage current relationship

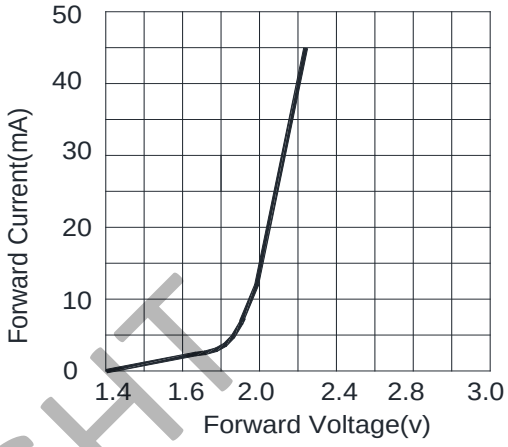

Current and ambient temperature

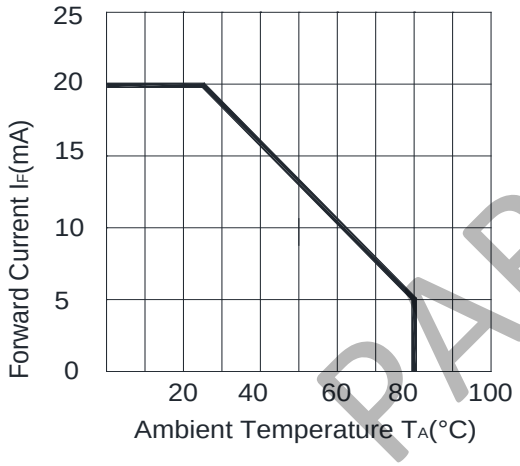

Relative light intensity vs current

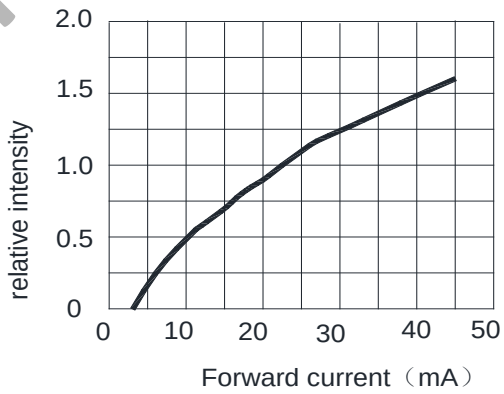

Relative light intensity vs ambient temperature

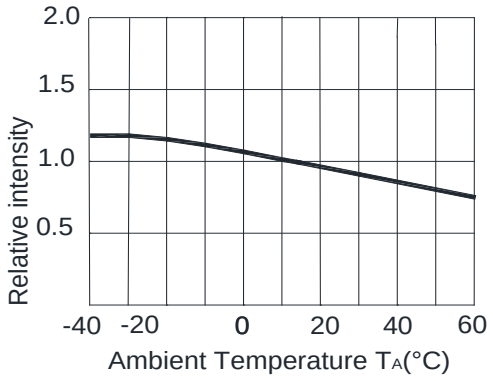

Radiation angle

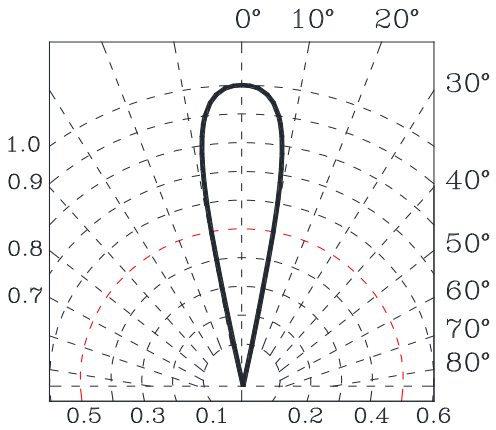

PARA LIGHT

- Reel Dimensions

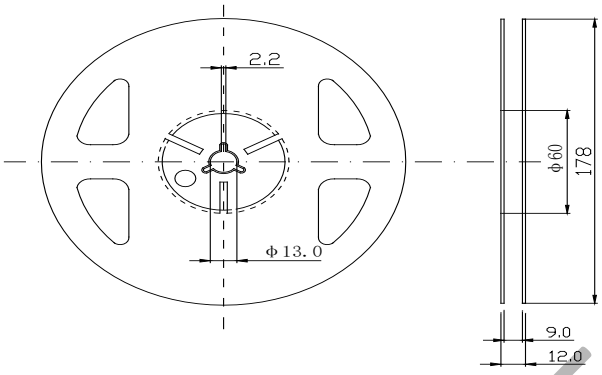

- Package Dimensions Of Tape And Reel

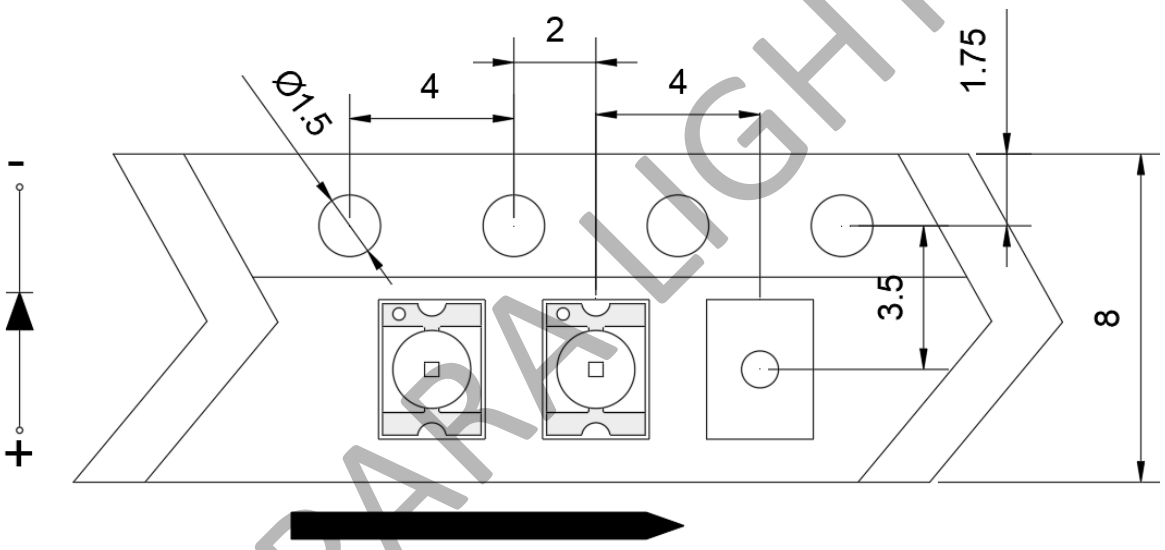

PARA LIGHT

Notes:

1. Taping Quantity : 1500pcs
2. The tolerances unless mentioned is±0.15mm

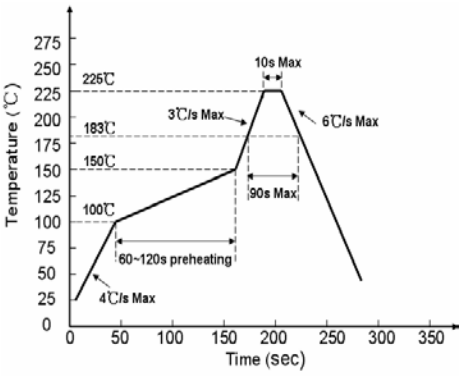

PB

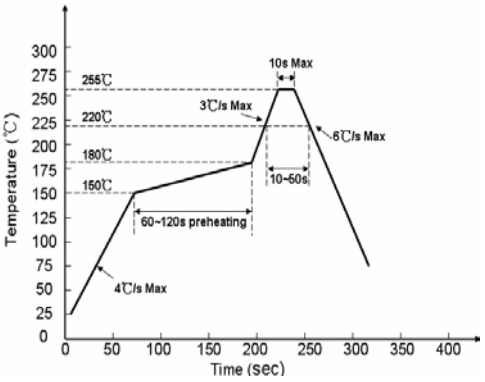

PB FREE

Reliability Test Items And Conditions

Items	Test Condition	Test Hours/Cycles	Quantity	Ac/Re
Moisture proof grade	1. Reflow soldering maximum temperature = 260 ℃, 10 seconds, twice reflow soldering; 2. Storage condition before reflow soldering: 30 ℃, relative humidity = 70%, 168h;	-	22 PCS	0/1
Reliability of welding (lead free)	Reflow soldering maximum temperature = 245 ± 5 ℃, 5 seconds (lead free reflow soldering)	-	22PCS	0/1
Thermal Shock	H : +85℃ 15min. conversion time is 3 minutes L : -35℃ 15min.	300Cycles	22PCS	0/1
High Temperature Storage	Temp. : 100℃	1000Hrs	22PCS	0/1
Low Temperature Storage	Temp. : -40℃	1000Hrs	22PCS	0/1
Room temperature aging	Ta=25℃ IF=20mA	1000Hrs	22PCS	0/1
Thermal cycling	-40 ℃ 30 min ~ 25 ℃ 5 min~ 100 ℃ 30 min ~ 25 ℃ 5 min	300Cycles	22PCS	0/1

PARA LIGHT

Failure Criteria

Test Items	Symbol	Test condition	Failure Criteria	
			Min.	Max.
Forward Voltage	VF	IF=20mA	---	(U.S.L*)×1.1
Reverse Current	IR	VR=5V	---	(U.S.L*)×2.0
Luminous Intensity	Iv	IF=20mA	(L.S.L*)×0.7	---

Notes:1.U.S.L means the upper limit of specified characteristics.

2.Measurment shall be taken between 2 hours and after the test pieces have been returned normal ambient conditions after completion of each test.

● Cautions

use

1. LED is a current driven component, the slight change of voltage will produce large current fluctuation, which will lead to component damage.
The customer should use resistance series as current limiting protection.

2. In order to ensure the color consistency of multiple LEDs in parallel, it is recommended to use a separate resistor for each branch, as shown in mode a below;
If the circuit shown in mode B below is used, the LED light color may be different due to the different volt ampere characteristics of each LED

Circuit mode A	Circuit mode B
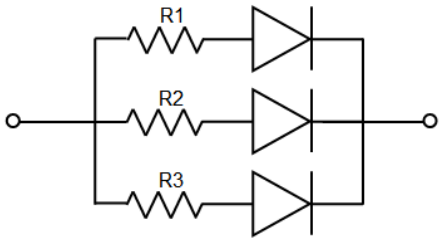	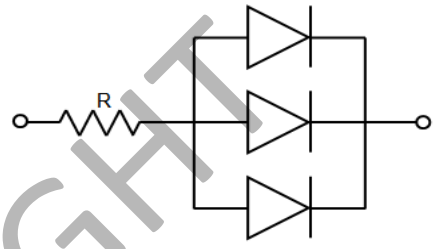

3.Too high temperature will affect the brightness and other performance of LED, so in order to make the LED have better performance, we should keep the led away from heat source

Storage

1.Without opening the original package, the recommended storage environment is: temperature 5 ℃ ~ 30 ℃, humidity below 85% RH. When inventory exceeds two months,Dehumidification should be carried out before use at 60 ℃ / 8 hours

2.After opening the original package, the recommended storage environment is: temperature 5 ~ 30 ° C, humidity below 60%

3. LED is a humidity sensitive element. In order to avoid moisture absorption, it is recommended to store the LED in a sealed container with desiccant or in a nitrogen moisture-proof cabinet after opening the package

4.After unpacking, the components should be used within 168 hours (7 days); and the welding should be completed as soon as possible after placement

5.If the desiccant fails or the element is exposed to air for more than 168 hours (7 days), dehumidification should be performed, Baking conditions: 60 ℃ / 24 hours

ESD (Electrostatic Discharge)-Protection

A LED (especially the Blue、White and Green product) is an ESD sensitive component, and static electricity or power surge will damage the LED. ESD-damaged LEDs will exhibit abnormal characteristics such as high reverse leakage current, low forward voltage, or “no light-up” at low currents, etc.

Some advice as below should be noticed:

1. A conductive wrist strap or anti-electrostatic glove should be worn when handling these LEDs.
2. All devices, equipment, machinery, work tables and storage racks, etc. must be properly grounded.

PARA LIGHT

3. Use anti-static package or boxes to carry and storage LEDs. And ordinary plastic package or boxes is forbidden to use.
4. Use ionizer to neutralize the static charge during handling or operating.

Cleaning

Use alcohol-based cleaning solvents such as IPA (isopropyl alcohol) to clean LEDs if necessary.

Welding

1.Refer to the temperature curve on page 1 for reflow welding conditions;
2.The number of reflow soldering shall not exceed two times;
3.It is only recommended to use manual welding in the case of repair and heavy work. The maximum welding temperature should not exceed 300 ℃ and should be completed within 3 seconds.
4.The maximum power of soldering iron shall not exceed 30W;
5.During welding, it is forbidden to touch colloid at high temperature; after welding, it is forbidden to apply external force on colloid and bend PCB to avoid damage to components to hit.

Other

1.The definition of LED described in this specification shall be used in the scope of common electronic equipment (such as office equipment, communication equipment, etc.). If there is more severe Especially when the component failure or failure may directly endanger life and health (such as aerospace, transportation, transportation, medical treatment) Equipment, safety protection, etc.), please inform our business personnel in advance;
2.When high brightness LED products are on, it may cause damage to human eyes, so it is necessary to avoid looking directly at them from above;
3.For the purpose of continuous improvement, product appearance and parameter specifications may be changed without prior notice.

PARA LIGHT